UKAS QUALITY MANAGEMENT 005

SYSTEM CERTIFICATION ISO 9001:2008 SGS

ACROW

Formwork Technology

Acrow Frame System

ACROW MISR Provides Full Site Service Based On More Than 35 Years Experience In The Field

ACROW

Formwork Technology

ACROW

Formwork Technology

Contents

Introduction	2
Applications	3
Acrow Frame As Slab Shoring	4
Acrow Frame Facade Scaffolding System	7
Mobil Scaffolding Tower System	9
Application For Acrow Frame For Grandstand	10
Components	12

ACROW
Formwork Technology

Introduction

•Acrow Frame system is one of the most popular and widely propagated through nearly all Modern Construction Project it can be used as shoring System for slabs,as facad for external plaster,GRC,Paintings,and for Grandstand also.

•The system is fully comprehensive and includes safety guard rails when required.

•Castors Wheel and outriggers are also available for Mobile tower applications.

•The acrow frame system has been specially designed for easy and fast assembly by unskilled operatives with the minimum of supervision.

•The basic system utilises a small number of components that are simply and easily fitted together to give a rigid structure.

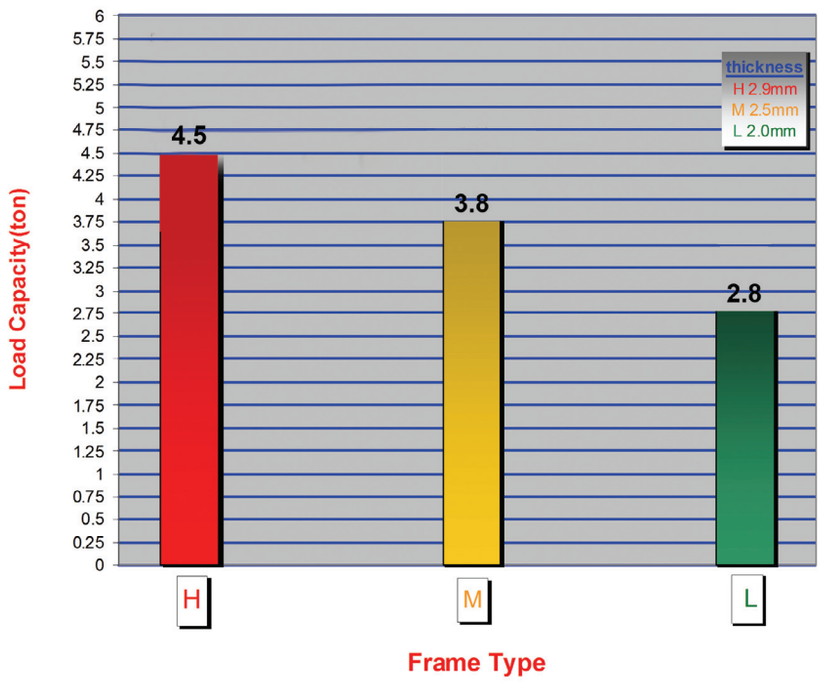

Applications

- Acrow Frame As Slab Shoring
- Acrow Frame as facde Scaffolding system .
- Fixed or mobile access towers for maintenance and other trades.
- Acrow Frame for Grandstand

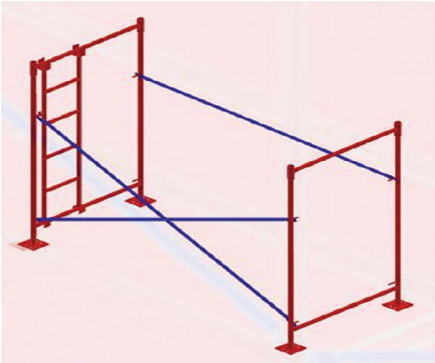

Acrow Frame As Slab Shoring

•Acrow frame can be used as shoring for building projects, it is ideal system for thin and high slabs .
•Acrow frames are available in different sizes (2.00x1.00m, 1.57x1.00m,1.00x1.00m and 0.50x1.00m) to be suitable for slabs of different heights for buildings and tanks.

Components:

1-Acrow Timber H20 Beam / timber by site
2-U-Head Jack
3-Cross Brace
4-Acrow Frame
5-Double Coupler
6-Steel Tube 1.5''
7-Plain Base

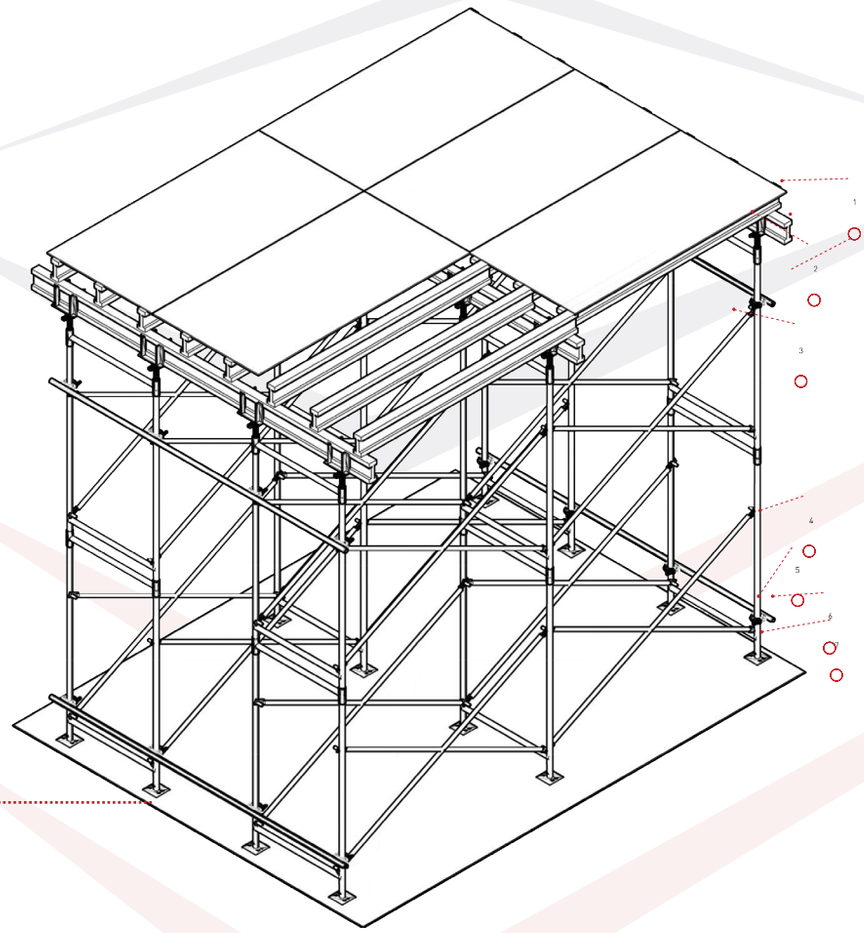

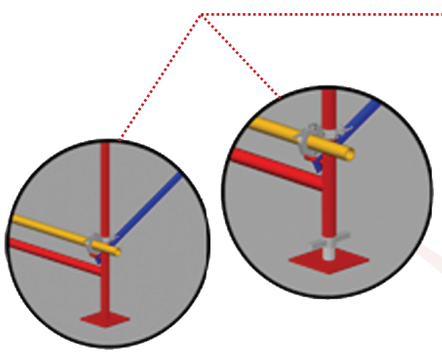

Note : Post Head Jack can be used instead of plan base to height and site conditions

Application For Acrow Frame As Slab Shoring Decking Timber By Site

Application For Acrow Frame As Slab Shoring Decking Timber H20 Beam

Acrow Frame Facade Scaffolding System

1- The first frame is supported on plain bases.
2- The Cross Brace is fitted to the Latch Pin.
3- The horizontal ledger is fitted to the Latch Pin.
4- at this step there is two frames is connected to gether by ledger and the other side use cross brace.
5- The ladder is fitted to the frame.
6- In similar sequence adding frames, Ledger & cross brace.
7- Adding the steel blank to fit the second level of the scaffold.

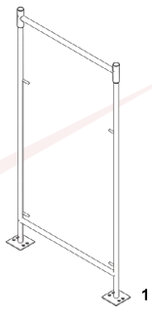
1

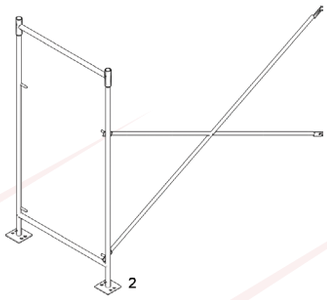
2

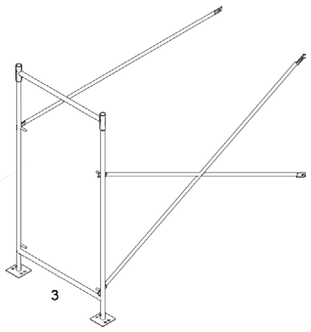
3

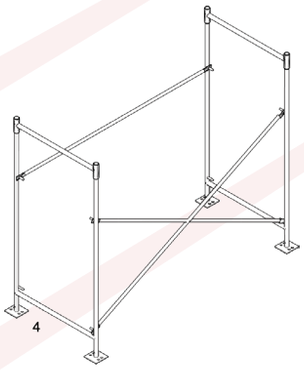
4

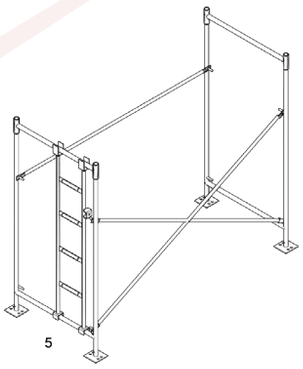
5

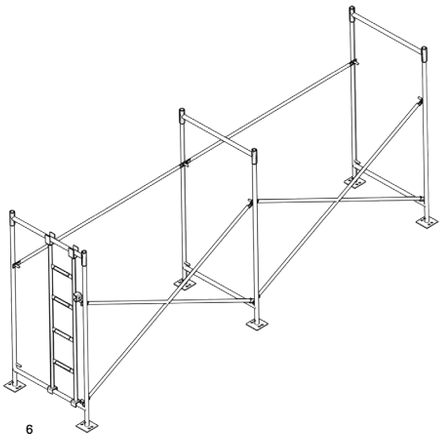
6

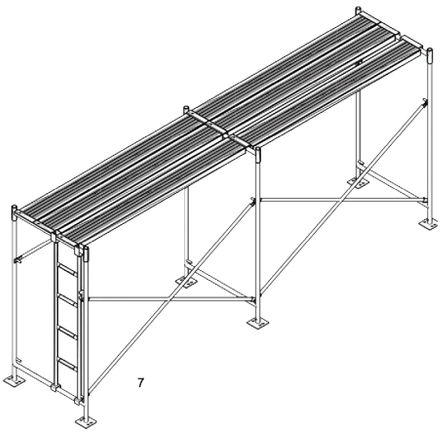
7

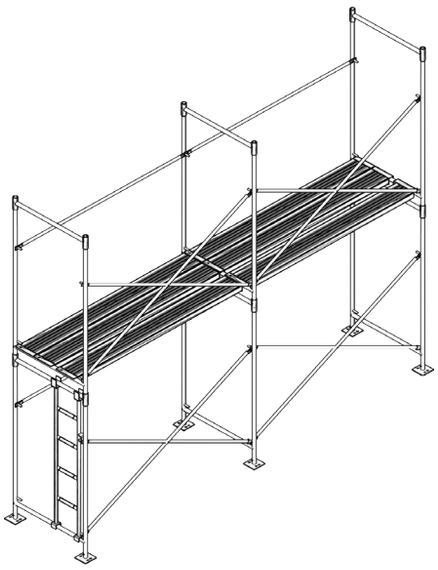
8

Application For Acrow Frame As Facade Scaffolding System

Mobil Scaffolding Tower System

1- Acrow Frame
2- Steel Blank
3- Cross Brace
4- Rivet Pin & Spring Clip
5- Steel Tube 1.5''
6- Double Coupler 1.5'' x 1.5''
7- Outrigger Bracket
8- Caster Wheel
9- Ladder Unit
10- Ledger

Item \ Height	2m	3m	4m	5m	6m	7m	8m	9m	10m
Main Frame 2.0 x 1.0 m	2	2	4	4	6	6	8	8	10
Main Frame 1.0 x 1.0 m	2	4	2	4	2	4	2	4	2
Cross Brace 2.4 m	2	4	4	6	6	8	8	10	10
Ledger 2.4 m	2	2	2	2	2	2	2	2	2
Wheel 8"	4	4	4	4	4	4	4	4	4
Ladder 2.0 m	-	1	2	2	3	3	4	4	5
Outrigger	-	-	-	4	4	4	4	4	4
Tube 1.5" L= 3.0 m	1	2	2	3	3	4	4	5	5
Double Coupler	2	4	4	6	6	8	8	10	10
Rivet Pin & Spring Clip	8	12	12	16	16	20	20	24	24
Steel Plank 2.4 m	3	3	3	3	3	3	3	3	3

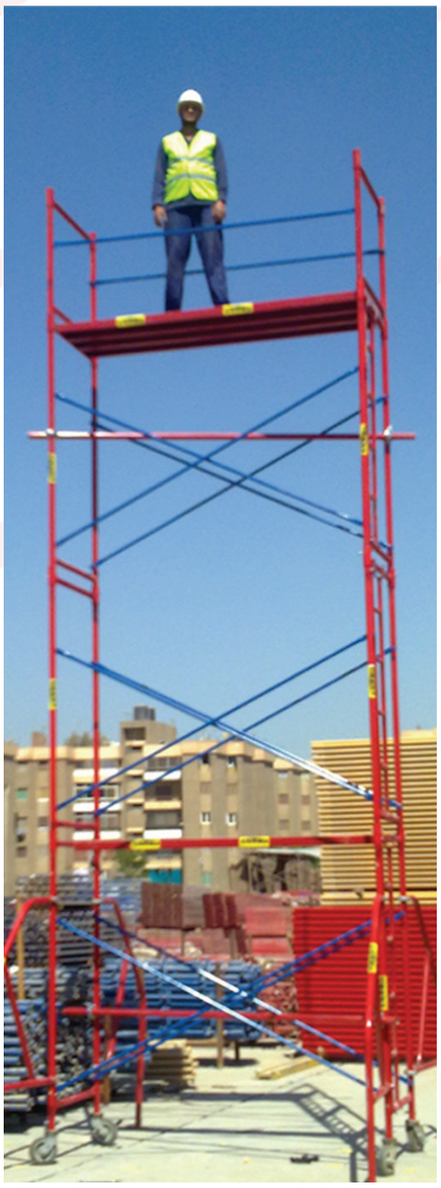

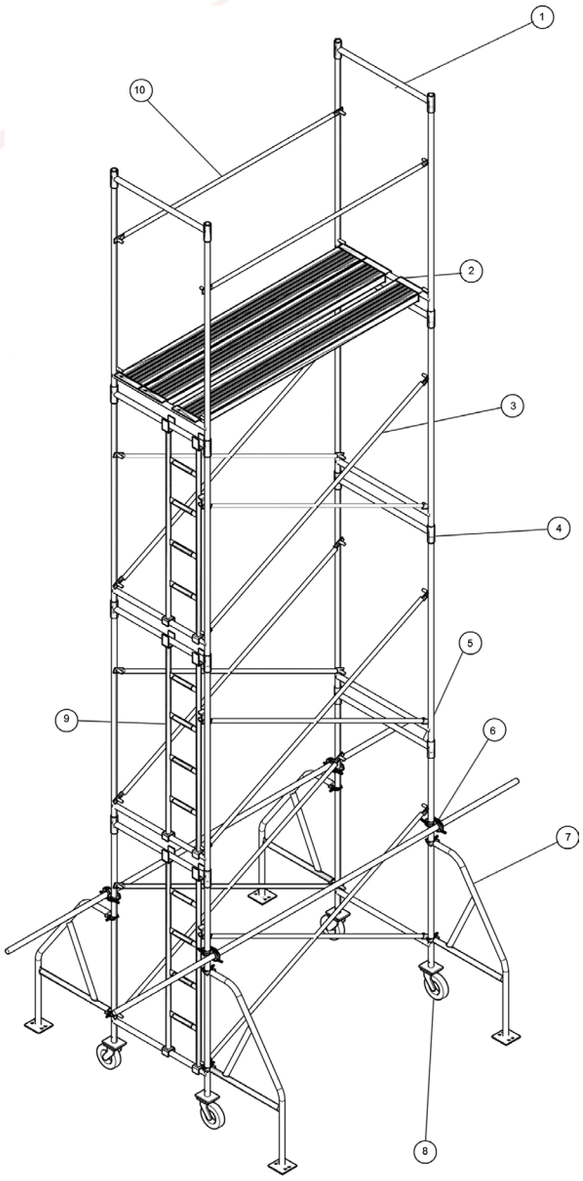

Application For Acrow Frame For Grandstand

Application For Acrow Frame For Grandstand

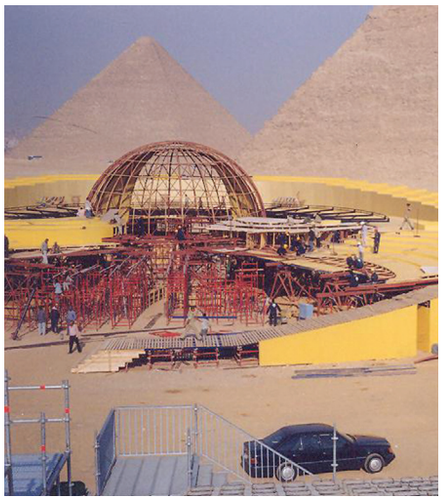

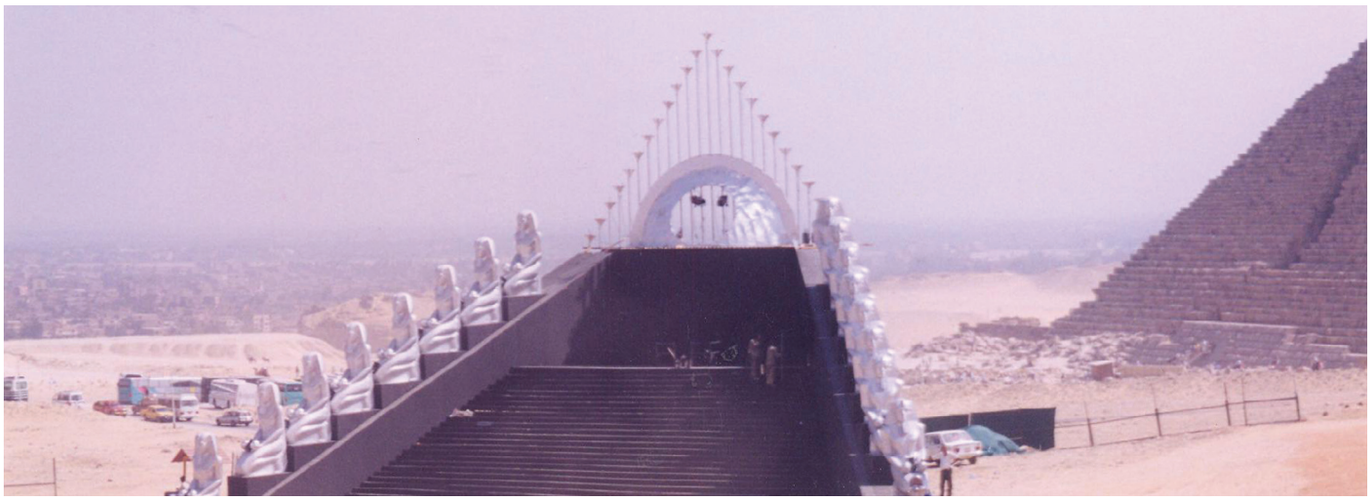

Components

Item	Description	Code no.	Weight (kg)
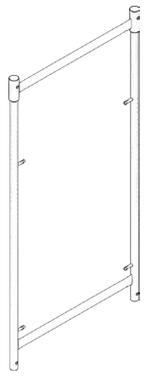	Acrow Frame 2.0×1.0m (H) Acrow Frame 2.0×1.0m (L) Acrow Frame 2.0×1.0m (M) Acrow Frame 1.5×1.0m (H) Acrow Frame 1.5×1.0m (L) Acrow Frame 1.5×1.0m (M)	6221177009304 6221177009311 6221177009328 6221177009274 6221177009281 6221177009298	20.80 19.10 14.40 18.00 16.60 13.40
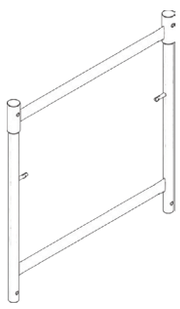	Acrow Frame 1.0×1.0m (H) Acrow Frame 1.0×1.0m (L) Acrow Frame 1.0×1.0m (M)	6221177009243 6221177009250 6221177009267	14.00 13.25 10.80
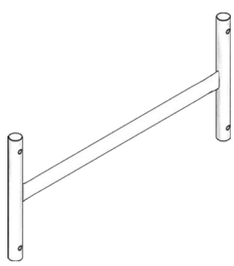	Acrow H Frame 1.00 x 0.50 M	6221177009335	6.80
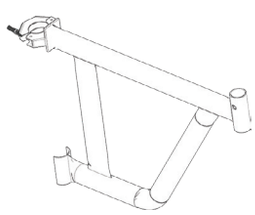	Hop Up Bracket (for acrow frame)	6221177003319	7.50

Components

Item	Description	Code no.	Weight (kg)
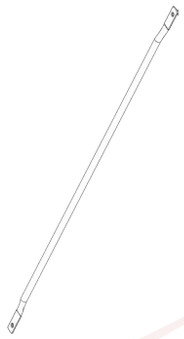	Acrow Ledger L= 0.90 m L= 1.20 m L= 1.50 m L= 1.80 m L= 2.10 m L= 2.40 m L= 2.70 m L= 3.00 m	 6221177010928 6221177010935 6221177010942 6221177010959 6221177010966 6221177010973 6221177010980 6221177010997	 1.20 1.55 1.90 2.30 2.64 3.00 3.25 3.60
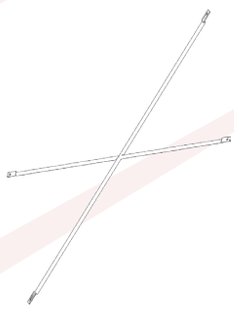	Acrow Cross Brace L= 0.90 m L= 1.20 m L= 1.50 m L= 1.80 m L= 2.10 m L= 2.40 m L= 2.70 m L= 3.00 m	 6221177008062 6221177008079 6221177008086 6221177008093 6221177008109 6221177008116 6221177008123 6221177008130	 3.35 3.80 4.70 5.20 5.80 6.40 7.15 7.70
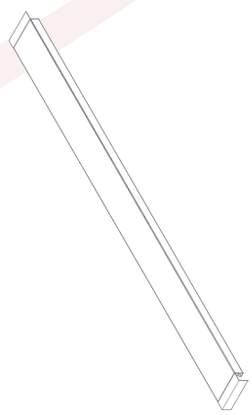	Steel Plank 0.9m (1.5 mm) Steel Plank 0.9m (2 mm) Steel Plank 1.2m (1.5mm) Steel Plank 1.2m (2mm) Steel Plank 1.5m (1.5mm) Steel Plank 1.5m (2mm) Steel Plank 1.8m (1.5mm) Steel Plank 1.8m (2mm) Steel Plank 2.1m (1.5mm) Steel Plank 2.1m (2mm) Steel Plank 2.4m (1.5mm) Steel Plank 2.4m (2mm) Steel Plank 2.7m (1.5mm) Steel Plank 2.7m (2mm) Steel Plank 3.0m (1.5mm) Steel Plank 3.0m (2mm)	6221177022679 6221177022686 6221177022693 6221177022709 6221177022716 6221177022723 6221177022730 6221177022747 6221177022754 6221177022761 6221177022778 6221177022785 6221177022792 6221177022808 6221177022815 6221177022822	6.60 8.10 8.20 12.20 9.79 12.30 11.37 14.40 12.95 16.52 14.53 18.60 16.34 20.73 18.16 22.83
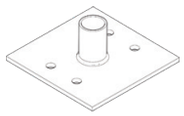	Plain Base	6221177000851	1.10

Components

Item	Description	Code no.	Weight (kg)
	Rivet Pin 7.5 cm Spring Clip small	6221177012274 6221177022624	0.20 0.01
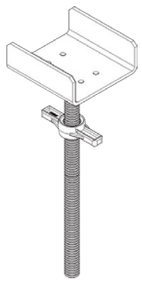	Acrow U-Head Jack solid Acrow U-Head Jack tubular	6221177025922 6221177025960	8.60 6.00
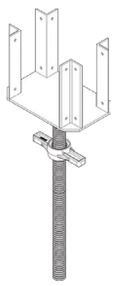	Acrow U-Head Jack Angle type for H20	6221177025892	8.70
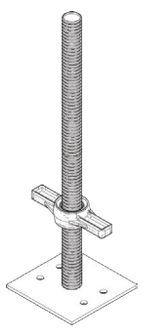	Post Head Jack Solid 34mm (L) 1.5" Post Head Jack Solid 34mm (L) 2" Post Head Jack Tubller 38 mm 60 cm	6221177013103 6221177013110 6221177013127	5.30 7.10 3.80

Components

Item	Description	Code no.	Weight (kg)
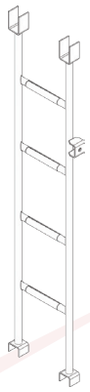	Acrow Ladder 2.00 M	6221177010799	9.65
	Prop X0 Prop X1 Prop X2 Prop X3 Prop X4 Acrow Eurp Prop (300) Acrow Eurp Prop (350) Acrow Eurp Prop (400) Acrow Eurp Prop (500) Acrow Eurp Prop (550)	6221177013295 6221177013301 6221177013332 6221177013356 6221177013370 6221177013381 6221177013392 6221177013403 6221177013414 6221177013425	13.65 20.30 21.50 23.85 28.70 19.00 21.30 23.50 26.00 30.60
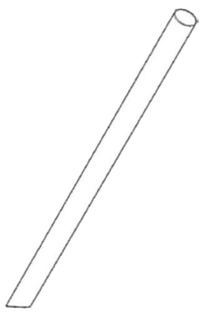	Scaffolding Tube 1.5"×2.9 mm L=3.00m	6221177017378	10.05

Components

Item	Description	Code no.	Weight (kg)
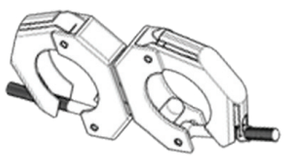	pressed Prop double Coupler 1.5''x 2.0''	6221177006969	0.85
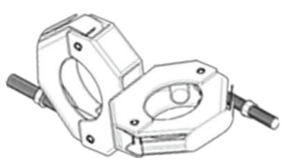	presed Prop swivel Coupler 1.5''x 2.0''	6221177006976	0.95
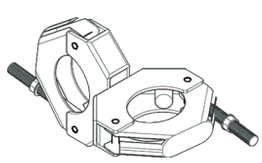	Forged Double Coupler (1.5"×1.5")	6221177006853	0.95

Components

Item	Description	Code no.	Weight (kg)
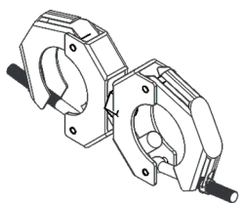	Forged Swivel Coupler (1.5"×1.5")	6221177006884	1.15
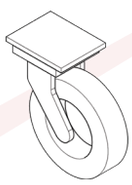	Caster Wheel 6" (Steel)	6221177027766	18.00
	Outrigger Bracket	6221177003326	15.00

ACROW
Formwork Technology

Acrow H20 & solider

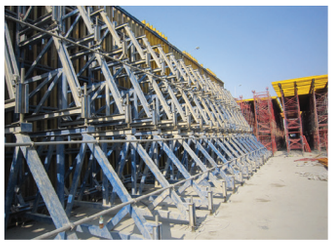
Acrow One shutter solider

Acrow V.M.C

Acrow Tech-Form

Acrow Cuplock

Acrow Bridge table form

Acrow Circular column

Acrow climbing system

Acrow shorbrace Table form

Acrow Big steel panel

Acrow European prop

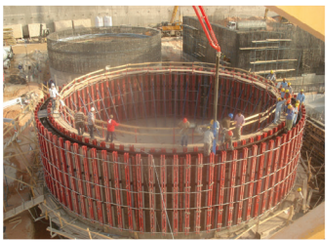
Acrow Vari form

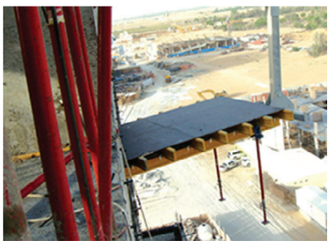
Acrow Prop table form

Acrow frame

Acrow early striking system

Acrow Ring lock

www.acrow.co

02/2013, Code No.: 2007050060099

20
OFFICE

14
BRANCH

AFRICA

EGYPT

Head Quarter
Factory: Wady Houf, Helwan
Tel.: [+202] 23690 616 / 23690 739
[+202] 23695 700 / 23699 976
Fax: [+202] 23695 260
E-mail: info@acrow.co
Alexandria Branch
27 Dr. mahmoud Daoud st.
Tel.: [+203] 4200 289
E-mail: acrowalex@acrow.co

MOROCCO

221 BVD Zerktouni , 3ème et 4ème etage - B.N. 06/08, Casablanca 20100, Morocco
Tel. : [+212] 522 945 912
Mob. : [+212] 660 675 640
E-mail: acrowmorocco@acrow.co

ALGERIA

Siege Social, cité des travailleurs lot. 09 groupe 02 Dar El beida, Algiers
Tel.: +213 (0) 23 74 74 37
Tel.: +213 (0) 23 74 74 35
Fax: +213 (0) 23 74 74 37
E-mail: acrow-dz@acrow.co

NIGERIA

Block D, Plot 23, Water Corporation drive, VI, Lagos.
Tel. : [+234] 818 0000 295
Mob. : [+234] 6061 7290 99
Email : acrownigeria@acrow.co

KENYA

Nairobi
Kiungani Rd, off Mombasa Rd, Nairobi, Kenya
Tel. : [+254] 772324535
E-mail: acrowkenya@acrow.co

TANZANIA

Dar EsSalam
Oyster Bay Masaki, Dar EsSalam
Tel. : [+255] 768 696 314
E-mail: acrowtanzania@acrow.co

ASIA

KSA

Riyadh Office
Office No. 13A- Sultan Business Building - Almaathar Ash shamali district - Sultan Ben Abdulaziz Street - Riyadh
Tel. : [+966] 11 216 0504
Fax : [+966] 11 216 0503
Mob. : [+966] 55 001 2693
E-mail: acrowriyadh@acrow.co

Jeddah Office
Office No. 15 - 4th Floor - Zahid Building - Alsalamah district - Mohamed Ibrahim Masoud Street - Jeddah
Tel. : [+966] 12 691 7941
Fax : [+966] 12 275 1037
Mob. : [+966] 50 001 3206
E-mail: acrowjeddah@acrow.co

Dammam Office
Office 2, Alsalam Building, Madinat Alummal Dist., King Fahd Road
Tel. : [+966] 13 805 4151
Fax : [+966] 11 216 0503
Mob. : [+966] 55 468 7057
E-mail: dammam@acrow.co

Madinah Al Munawwarah
Office 6, First Floor, Ghos Building, In Front Of Saudi Post, Sultanah Street, Almadinah
Tel. : [+966] 11 216 0504
Fax : [+966] 11 216 0503
Mob. : [+966] 55 775 8197
E-mail: almadinah@acrow.co

Tabuk City
Al Muruj District
Prince Mamdouh Bin Abdul Aziz Street
Building Name : Tabuk Business Center
Building No.2786
PO.Box : 47312
Second Floor , Office No.203
Tel. : [+966] 11 216 0504
Fax : [+966] 11 216 0503
Mob. : [+966] 55 001 2693
E-mail: acrowriyadh@acrow.co

UAE

Dubai
Office 1002, The Onyx Tower 2- The greens - Dubai.
Tel. : [+971] 43439498
Fax : [+971] 43439598
Mob. : [+971] 528228811
E-mail: acrowgulf@acrow.co

Abu Dhabi
Office 816, Al Junaibi Tower, Al Muroor Road - Abu Dhabi.
Mob. : [+971] 588113383
E-mail: acrowad@acrow.co

EUROPE

ROMANIA

Acrow SRL
Strada Intrarea Panduri 4, Rudeni 077046, Romania
Mob. : [+40] 721 297 342
E-mail: acrow.romania@acrow.co

KUWAIT

Al Aridiyah , Block 2 , Building 92,
Kuwait Khalid Ali Al Kharafi & Bros.Co.W.LL
Tel.: [+965] 22083000 – Ext [240]
Fax: [+965] 22083001
E-mail: acrowkuwait@acrow.co

BAHRAIN

Acrow Bahrain Co. W.L.L
Office 1718, building 1260, Road 2421
Block 324 , Juffair, Manama , Kingdom of Bahrain
Mob. : [+973] 35 176 860
E-mail: acrowbahrain@acrow.co

QATAR

Acrow Qatar
Salwa Road, Red Tag building,
1st floor, Doha
P.O. Box No.: 15104
Tel.: [+974] 44582357
Fax: [+974] 44582376
E-mail: acrowqatar@acrow.co

OMAN

Acrow LLC
Office 23, Bin Hayl 2 Building , Bawshar St ,Muscat , Sultanate of Oman
Tel. : [+968] 24 112 791
Mob. : [+968] 92 543 734
E-mail: acrowmuscat@acrow.co

JORDAN

Jordan - Amman - Al Jandawil - Hosni Subar Str - Builiding no 05 - Third Floor
Mob. : [+962] 797 603 936
E-mail: acrow.jordan@acrow.co